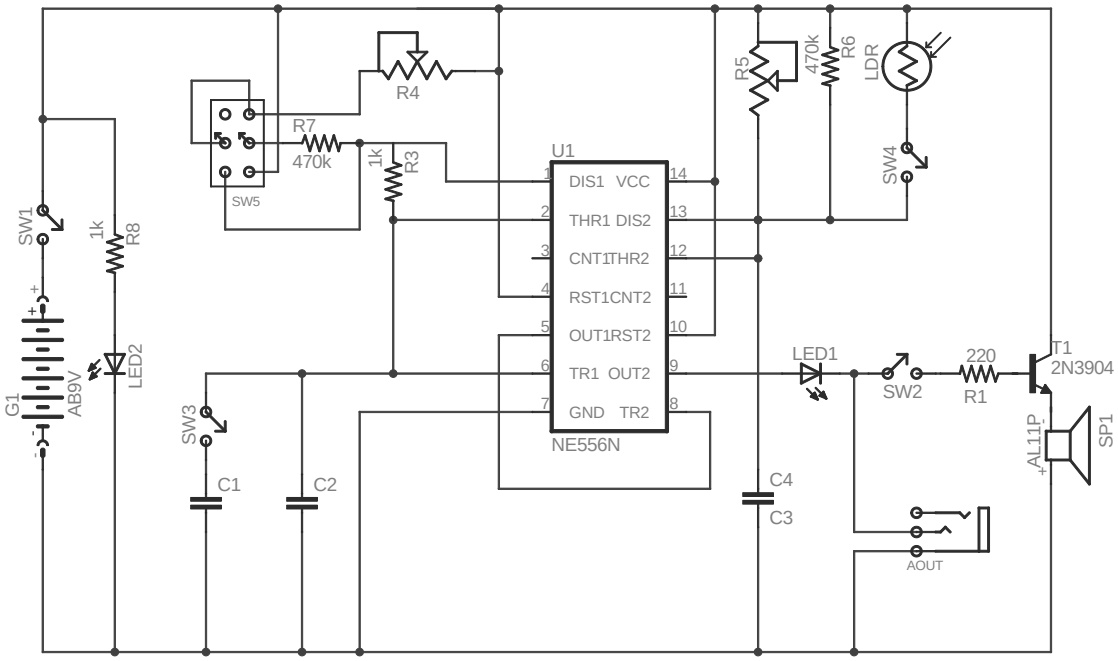
SW1
1k
R8
G1
AB9V
LED2
SW3
C1
C2
SW5
R7
470k
R4
1k
R3
U1
DIS1 VCC
THR1 DIS2
CNT1THR2
RST1CNT2
OUT1RST2
TR1 OUT2
GND TR2
NE556N
R5
470k
R6
LDR
SW4
LED1
SW2
220
R1
T1
2N3904
AL11P
SP1
C4
C3
AOUT